SCIENTIST AS DETECTIVE: LUIS ALVAREZ AND THE PYRAMID BURIAL CHAMBERS, THE JFK ASSASSINATION, AND THE END OF THE DINOSAURS

Charles G. Wohl
Lawrence Berkeley National Laboratory, Berkeley, CA 94720

Luis Alvarez (1911–1988) was one of the most brilliant and productive experimental physicists of the twentieth century. His investigations of three mysteries, all of them outside his normal areas of research, show the wonders that a far-ranging imagination working with an immense store of knowledge can accomplish.

• The 1968 Nobel Prize in Physics, awarded to Luis W. Alvarez:

"For his decisive contributions to elementary particle physics, in particular the discovery of a large number of resonant states, made possible through his development of the technique of using hydrogen bubble chambers and data analysis."

• Richard Feynman, considering whether or not to do the O-ring-in-ice-water demonstration in the Challenger disaster hearings:

"I think, 'I could do this tomorrow while we're all sitting around, listening to this [Richard] Cook crap we heard today. We always get ice water in those meetings; that's something I could do to save time.'

"Then I think, 'No, that would be gauche.'

"But then I think of Luis Alvarez, the physicist. He's a guy I admire for his gutsiness and sense of humor, and I think, 'If Alvarez was on this commission, he would do it, and that's good enough for me.'"[1]

1. THE PYRAMID BURIAL CHAMBERS[2]

Father and son—Figure 1 shows, near Cairo, the two largest pyramids ever built. They are 4,500 years old. In back is the pyramid of Cheops, and in front is the pyramid of his son Chephren. The pyramids were originally faced with smooth limestone, but only the small amount visible near the top of Chephren's pyramid remains; with the rise of Islam, the facing was quarried to build mosques and other structures in and around Cairo—just as in medieval Europe Roman works were quarried to build cathedrals and towns. There have been many guesses, most of them based on arguments of least effort, but it is not known just how the ancient Egyptians went about raising all that stone. The sides of the pyramids are very accurately aligned north-south and east-west, and it is not known how that was done either.

Cheops' pyramid stands on slightly lower ground than Chephren's and has lost its top 9 m (30 ft), but it is the "Great Pyramid." Before it lost its facing and tip, it was 230 m (756 ft) on a side and 147 m (481 ft) high, and its base covered 5.29 hectares (13.1 acres). Chephren's pyramid, which has also lost a few feet, was 216 m (707 ft) on a side and 143 m (471 ft) high. Nothing taller than the pyramids was built until the

Washington Monument at 169 m (555 ft) and the Eiffel Tower at 300 m (984 ft), both completed in the 1880s.[3] That other enormous structure, the Great Wall of China (the last of a series of walls), was not begun until about 1370 CE.

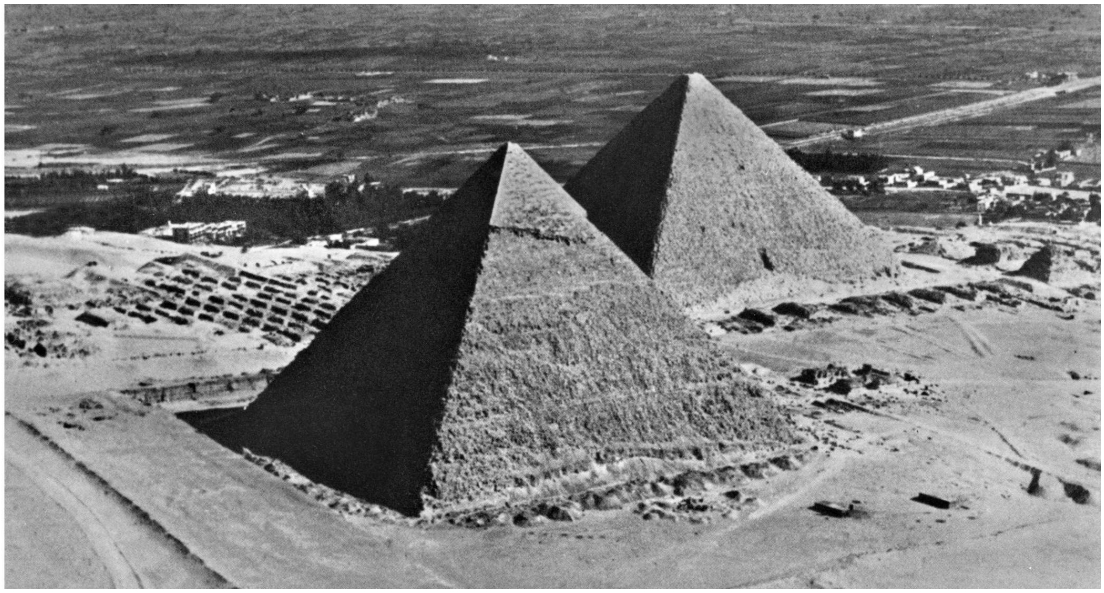

Fig. 1. The two largest pyramids, Cheops' in back and his son Chephren's in front. The tips of the pyramids are gone, and Chephren's pyramid retains some of its original smooth facing.

Figure 2(a) shows the known chambers in Cheops' pyramid. There is a "King's Chamber," with structures above to deflect the immense weight of rock bearing down (the arch had not yet been invented), a "Queen's Chamber," a long sloping "Grand Gallery," and passageways to connect them all. (Cheops' queen was in fact not buried in the pyramid. The names here are from the ninth century, when an Islamic ruler rediscovered the chambers by tunneling into the pyramid. The chambers were empty, having evidently been broken into and looted far in the unrecorded past.)

Figure 2(b) shows the only known chamber in Chephren's pyramid—a small room underneath. Luie—everyone called Luis Alvarez Luie, and so shall I—first saw the pyramids in 1962, and he thought that for the son's pyramid to be so much less intricate than the father's was not in accord with human nature. Anyone might wonder if there were undiscovered chambers, but when an interesting mystery caught Luie's attention, he could be extraordinarily tenacious in trying to solve it. He discovered a way to find out if there are more chambers—without digging tunnels.

How to do this? Figure 3(a) shows a conceptually simple scheme: Place a strong x-ray source that emits in all directions in the chamber beneath the pyramid, and cover the four faces of the pyramid with large photographic plates. The more rock the x rays have to pass through to reach the surface, the more their intensity is reduced. Since the distance from the source to the plates is shorter to the centers of the faces of the pyramid than to their edges, the (negative) plates will be more exposed and darker near their

centers and shade to lighter at the edges—see Fig. 3(b). And a chamber would mean less rock in paths through it to the outside, and would be revealed as a darker patch on the plate.

But this scheme, while simple in concept, is completely impractical: the x rays will not penetrate, the plates are a bit large. Nor will radar or sonar work, because the radiations do not penetrate rock or are too scattered by small gaps between the blocks of rock. Nevertheless, the scheme Luie thought up looks very much like the x-ray scheme, but *run backwards*. A strong source of "rays" already exists—the cosmic rays. These—or their products—have been piercing the pyramids ever since they were built.

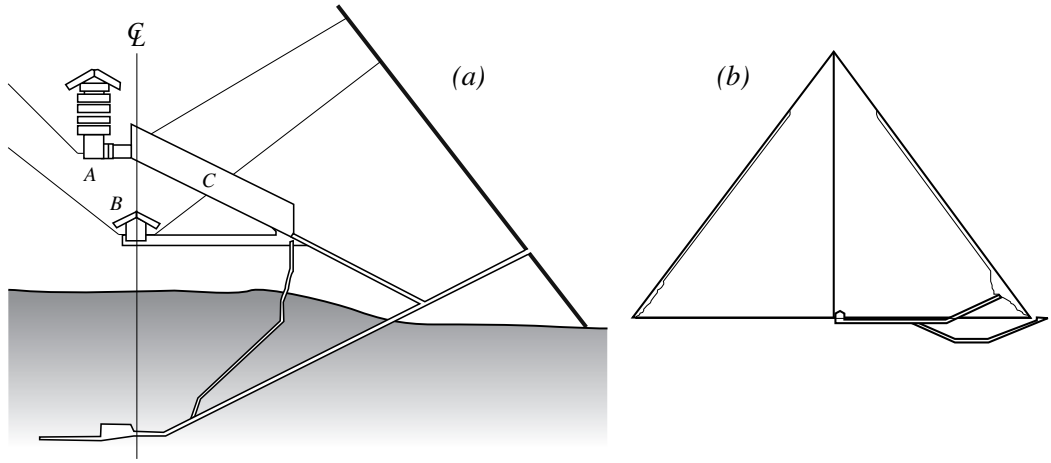

Fig. 2. (a) The known chambers in Cheops' pyramid: A, King's Chamber, B, Queen's Chamber; C, Grand Gallery. (b) Are there undiscovered chambers in Chephren's pyramid?

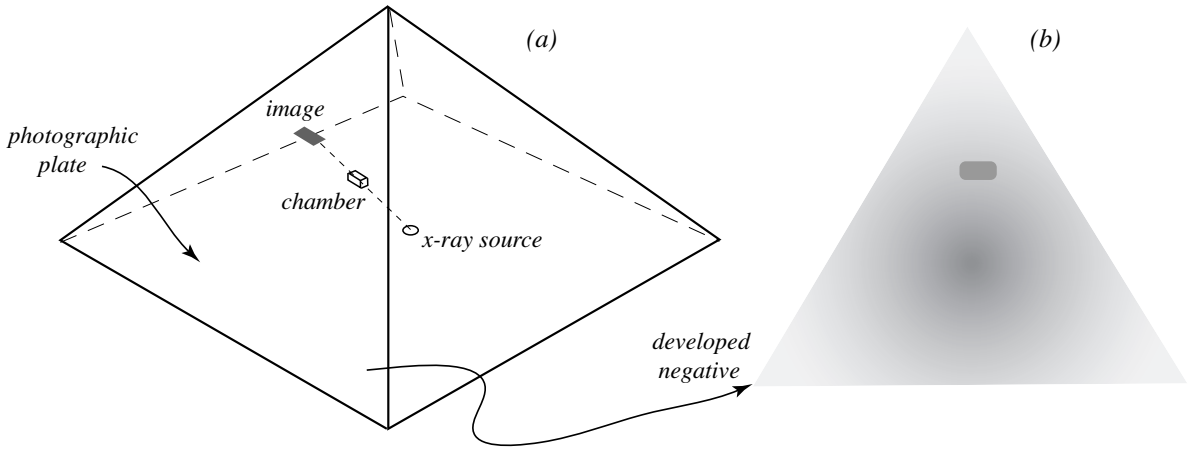

Fig. 3. A conceptually simple scheme to x ray Chephren's pyramid. A strong x-ray source darkens a photographic plate that covers a side of the pyramid. Less rock from the source to the surface means greater exposure of the plate.

Cosmic rays, muons, and spark chambers—Cosmic rays, which are mainly protons of all energies up to extremely high ones, pervade the Galaxy. Raining down upon the Earth, they collide with the atoms high in the atmosphere and produce an incessant shower of secondary particles. Most of these particles, while still high in the atmosphere, decay to (among other particles) muons. At ground level, muons arrive from every direction of the sky. A muon is like an electron except it is about 207 times as massive. "Who ordered that?" asked the physicist Isidor Rabi when the muon—a complete surprise—was discovered. A muon also eventually decays, but before it does so it simply plows through matter in a very nearly straight line, losing energy by ionizing atoms along the way. Mechanisms in our cells constantly repair the damage done to our DNA by this and other environmental "insults." We grew up in a dangerous neighborhood.

A high-energy muon can plow through many meters of rock before stopping—the higher the energy, the more rock. Conversely, the more rock, the fewer the muons that have enough energy to get through. A detector placed in the chamber beneath Chephren's pyramid, and able to measure the direction from which a muon comes, will count more muons coming through the centers of the faces of the pyramid than through their edges. And a burial chamber somewhere in the body of the pyramid would mean less rock for muons to penetrate, and more counts from that direction. Of course, this is very like the x-ray scheme, but with muons coming *in* instead of x rays going *out*.

Figure 4 shows the experimental design. At the top, there is a 6 ft-by-6 ft sandwich of two spark chambers, $S1$ and $S2$, between two trigger counters, $C1$ and $C2$. Beneath this sandwich, there are 36 tons of iron and a somewhat larger third trigger counter, $C3$. If a muon passes through all three trigger counters, as does the trajectory marked a, the two spark chambers are triggered and they each record the coordinates of the muon's passing. The two measured points on the trajectory establish the direction from which the muon came.

Muons that have lost nearly all their energy tend to straggle from a straight line; if they were recorded, they would blur the image. The purpose of the iron and lowest trigger counter is to ensure that a muon that passes through the spark chambers still has enough energy to pass through a foot of iron and trigger the third counter. Thus the spark chambers only record muons that are still, at those chambers, traveling in a straight line.

The whole area of the apparatus is sensitive to muons that come down vertically, but as the trajectory marked b in Fig. 4 shows, the apparatus does not catch all the muons that enter at large angles to the vertical. For this and other reasons, the efficiency dwindles to zero at an angle of about 45°, and is too low to get useful numbers of muons beyond about 35° (see below).

Muon photography—A team of Egyptian and American physicists and technicians, with oversight from Egyptian archeologists, set up the apparatus and associated electronic and computer equipment in the chamber beneath Chephren's pyramid. There were many troubles, both from the apparatus (this was the early days of spark chambers), and from the 1967 Arab-Israeli War, which broke out almost the day the experiment was finally ready to begin gathering data. Diplomatic relations between Egypt and the

United States were broken, and Americans were not welcome in Egypt for some months. But eventually relations were restored and data began to stream in.

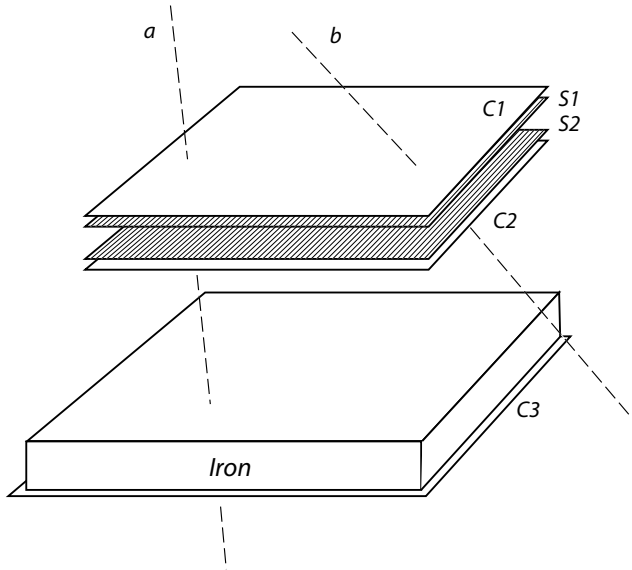

Fig. 4. The set-up used to "x ray" Chephren's pyramid with muons. A muon that passes through all three counters, $C1$, $C2$, and $C3$, triggers the two spark chambers $S1$ and $S2$, each of which records the coordinates of the muon's passing.

In any experiment, you look for what you know is there before you look for what you hope is there—an application of "Do not think what you want to think before you know what you ought to know."[4] The first test was, of course, to see the gross structure of the pyramid—the faces and edges. Figure 5 shows a more sensitive test—detection of the limestone facing at the top of the pyramid. The geometry of the pyramid without the facing is used as a base line. The curved line is the extra thickness of the facing as obtained from an aerial stereo-photo survey. The data points with errors show the extra thickness as calculated from counting fewer muons in the spark chambers. One plot runs in a band across the top in the north-south direction, the other east-west. The experiment can obviously detect the presence (or absence) of an extra two meters of rock.

Figure 6(a) shows the counts of muons obtained in a run of several months with the spark-chamber plates horizontal. The counts are those in 3°-by-3° bins, and only the counts in the northwest quadrant are shown here; where the axes cross is directly overhead. As already noted, the apparatus only measures in a conical volume out to about 35° from the vertical. The loss of efficiency at large angles is seen in the small numbers on the periphery of the figure.

Figure 6(b) shows the *expected* numbers of counts in the same bins, calculated from the geometry of the pyramid, the density of the rock, the position of the apparatus (not exactly beneath the tip of the pyramid), the flux of muons from the sky as a function of angle from the vertical, the efficiency of the apparatus as a function of this angle, and other factors. This calculation of course assumes there are no hidden chambers.

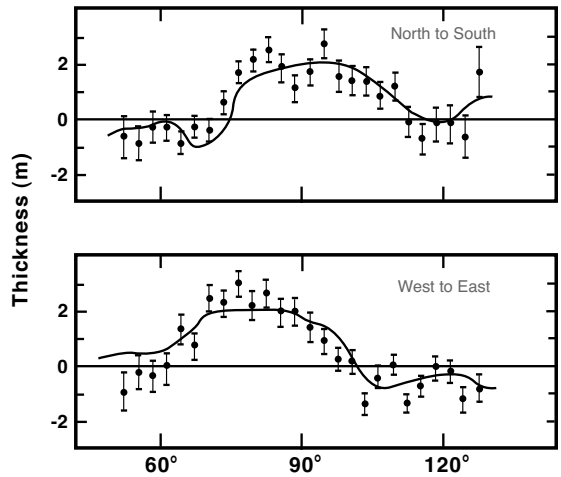

Fig. 5. A test of the scheme: A comparison of the thickness of the facing near the top of Chephren's pyramid as measured with an aerial stereo-photo survey (curved lines) and with counts of muons (data points).[2]

(a)

															N
							3	23	34	59	86	105	107	121	
			1	5	29	45	98	195	259	298	334	397	380	442	
	2	18	54	73	110	201	294	381	511	559	599	641	716	716	
1	24	54	114	191	213	335	419	560	724	838	803	869	1002	975	
5	44	112	173	269	315	456	577	737	899	1010	1103	1068	1234	1271	
11	67	163	219	364	400	561	682	936	1092	1206	1208	1480	1441	1516	
16	93	201	288	397	465	681	832	1013	1228	1358	1413	1486	1661	1598	
23	132	256	359	442	562	716	935	1078	1311	1520	1434	1651	1808	1761	
20	165	312	472	515	605	778	922	1118	1309	1540	1538	1642	1785	1809	
28	230	361	542	625	628	799	972	1105	1338	1606	1457	1726	1780	1768	
55	262	424	648	708	791	907	1065	1082	1300	1492	1486	1657	1771	1751	
54	302	538	668	799	846	954	1119	1191	1290	1464	1484	1558	1688	1704	
78	318	545	782	908	946	1111	1253	1325	1470	1492	1357	1514	1643	1559	
95	364	591	786	949	941	1186	1259	1358	1482	1492	1302	1412	1448	1541	
W															

(b)

							3	15	35	62	80	104	118	126
			1	9	27	65	114	174	243	309	331	385	408	414
	2	16	47	88	124	195	274	367	468	565	584	663	696	723
2	24	63	117	179	224	326	429	549	685	806	823	927	969	985
5	49	110	182	262	316	444	573	721	889	1029	1041	1177	1226	1237
7	71	150	242	341	407	560	708	883	1082	1242	1250	1398	1451	1496
11	99	192	297	413	478	653	820	1017	1230	1420	1418	1586	1666	1673
15	130	246	356	464	530	719	891	1103	1334	1501	1507	1689	1766	1793
25	168	307	439	537	575	761	927	1139	1370	1544	1529	1705	1782	1811
38	209	371	527	633	663	815	938	1140	1373	1552	1534	1729	1763	1841
51	249	438	615	723	760	917	1013	1132	1339	1533	1537	1727	1803	1786
66	292	499	689	808	844	1019	1121	1222	1324	1459	1490	1646	1700	1791
78	328	552	761	882	925	1111	1234	1329	1438	1494	1385	1572	1662	1653
84	347	575	789	911	954	1132	1254	1369	1458	1474	1309	1405	1416	1511
W														

Fig. 6. (a) Counts of muons in 3°-by-3° bins in the northwest quadrant. (b) Expected numbers of counts in the same bins.

The statistical uncertainty on N counts is $\sqrt{N}$, the standard deviation. The lower, right bin in Fig. 6(a) has 1541 counts; the square root is 39. The expected number of counts, given in the corresponding bin of Fig. 6(b), is 1511. Thus the actual number of counts is about one standard deviation larger than the expected number. Figure 7 shows the differences, to the nearest standard deviation, between actual and expected numbers of counts for all the bins, with a 1 in the lower right bin of the northwest quadrant. Were all features of the pyramid and the apparatus perfectly understood—and no hidden chambers—one would expect about 87% of the entries in Fig. 7 to be 0 or ± 1, about 12% to be ± 2, and about 1% to be ± 3. A small excess of ± 2's and ± 3's indicates that the modeling of the pyramid and/or the apparatus was not perfect.

That doesn't really matter. What matters is what the signal would be if there were a large burial chamber in the pyramid. Figure 8 shows the expected signal if the King's Chamber of Cheops' pyramid were at about the same place in Chephren's pyramid: less rock, more actual counts, and an unmistakable cluster of positive standard deviations compared to the chamberless model. The data of Fig. 7 show that there is no large chamber in a conical volume out to about 35° from directly above the apparatus.

These results were published.[2] A later round of measurements, with the apparatus tilted toward one side of the pyramid or another, searched for burial chambers outside the cone covered in the first run. Nothing was found there either, but those results were never published.[5]

N

W *E*

							0	2	0	0	1	0	−1	0	0	1	−2	2	1	0	0	1							
				−1	0	−2	−1	2	1	−1	0	1	−1	1	−2	2	2	0	−2	1	−1	−1	1	0	2				
	0	0	1	−2	−1	0	1	1	2	0	1	−1	1	0	0	1	2	−1	1	0	0	1	−2	0	−2	0	−1	1	
−1	0	−1	0	1	−1	1	0	0	2	1	−1	−2	1	0	0	0	1	1	1	1	1	−1	0	0	1	0	0	−1	1
0	−1	0	−1	0	0	1	0	1	0	−1	2	−3	0	1	1	1	2	0	0	−2	−1	0	2	3	0	0	2	−1	−1
1	−1	1	−1	1	0	0	−1	2	0	−1	−1	2	0	1	0	2	3	1	1	0	−1	3	−1	2	1	−2	0	−1	−1
1	−1	1	−1	−1	−1	1	0	0	0	−2	0	−3	0	−2	−1	0	2	0	1	1	0	−2	0	1	0	1	−1	1	−1
2	0	1	0	−1	1	0	1	−1	−1	0	−2	−1	1	−1	−1	0	2	1	−1	−1	2	0	−1	−1	0	0	0	−1	0
−1	0	0	2	−1	1	1	0	−1	−2	0	0	−2	0	0	0	1	0	−1	−1	−1	0	2	1	2	0	0	0	−1	1
−2	1	−1	1	0	−1	−1	1	−1	−1	1	−2	0	0	−2	0	−1	0	1	1	0	1	2	0	0	1	1	0	−1	−1
0	1	−1	1	−1	1	0	2	−1	−1	−1	−1	−2	−1	−1	0	0	3	0	3	0	−1	1	1	−2	−1	1	0	−2	1
−1	1	2	−1	0	0	−2	0	−1	−1	0	0	−2	0	−2	−2	1	1	2	0	−1	−1	1	0	0	1	1	0	0	0
0	−1	0	1	1	1	0	1	0	1	0	−1	−1	0	−2	1	1	1	0	2	0	1	1	2	0	0	1	0	−1	1
1	1	1	0	1	0	2	0	0	1	0	0	0	1	1	1	−1	1	0	0	−2	−1	0	2	−1	0	0	−2	0	0
−1	−1	1	0	−2	0	1	1	1	1	−2	0	−1	0	2	−1	−1	1	−1	1	−1	−1	−1	−1	0	0	0	2	−1	0
1	−1	0	0	2	1	−3	0	−1	0	−2	0	1	−1	0	0	−1	−2	1	−1	−1	−2	3	0	0	−1	0	0	0	0
0	0	2	1	3	1	0	1	−1	−1	−1	0	0	1	3	1	1	0	−3	1	0	0	0	0	1	1	0	0	0	0
−1	2	0	1	−1	−1	0	−1	0	0	−1	0	0	−1	−1	0	3	1	0	0	0	−2	1	−2	−1	−1	1	0	−1	−1
2	0	1	2	2	0	0	1	0	1	0	0	−1	1	0	−1	1	2	0	0	0	0	0	0	−1	1	−1	2	1	−1
1	2	0	3	0	−2	0	2	2	0	0	0	0	1	0	0	1	1	−1	−1	−1	−1	0	0	0	1	2	1	−1	−1
0	0	1	2	1	0	0	1	0	1	1	−1	−1	−2	−1	−1	1	−1	−1	−2	−1	−1	−2	−3	1	2	1	0	1	−1
−2	3	1	2	1	1	0	2	−1	0	0	0	1	0	1	−1	1	−1	0	0	−2	−2	−1	−1	0	1	3	0	1	1
1	0	2	0	1	−2	1	0	1	1	1	0	0	0	1	0	0	0	−1	2	0	−1	0	−1	0	0	1	0	−1	0
1	0	−1	0	3	0	2	0	0	−1	−1	0	0	1	0	0	2	0	0	2	1	0	−1	−1	−1	0	0	2	0	−1
	2	2	1	2	−2	−1	0	−1	0	1	−2	0	1	0	0	−1	0	3	0	−1	0	−1	0	−1	2	1	0	0	0
		−1	1	3	−2	−1	−3	−3	0	−1	1	0	−1	0	1	2	0	−2	0	1	0	−2	0	0	0	−1	−1	−2	
			1	−1	2	−1	−2	−2	−3	−1	1	0	1	0	1	−2	1	1	1	0	0	−1	−1	−2	−1	−1			
						1	−2	−1	0	−2	−2	−2	0	0	−1	−1	0	−1	0	1	0	1	0						
												2	0	2	0	3	−1	2											

S

Fig. 7. Standard deviations in the comparison of measured and expected numbers of counts for all bins.

N

							0	2	0	0	1	0	-1	0
					-1	0	-2	-1	2	1	-1	0	1	-1	1
	0	0	1	-2	-1	0	1	1	2	0	1	-1	1	0
-1	0	-1	0	1	-1	1	0	0	2	1	-1	-2	1	0
0	-1	0	-1	0	0	1	0	1	0	-1	2	-3	0	1
1	-1	1	-1	1	0	0	-1	2	0	-1	-1	2	0	1
1	-1	1	-1	-1	-1	1	0	0	0	-2	0	-3	0	-2
2	0	1	0	-1	1	0	1	-1	-1	0	-2	-1	1	-1
-1	0	0	2	-1	1	1	0	-1	-2	0	0	-2	0	0
-2	1	-1	1	0	-1	-1	1	-1	-1	1	-2	0	0	-2
0	1	-1	1	-1	1	0	2	-1	-1	-1	-1	-2	-1	-1
-1	1	2	-1	0	0	-2	0	-1	-1	0	0	-2	0	-2
0	-1	0	1	1	1	0	1	0	1	0	-1	-1	0	-2
1	1	1	0	1	0	3	2	1	2	0	0	0	1	1
-1	-1	1	0	-2	2	6	6	6	5	-2	0	-1	0	2
1	-1	0	0	2	2	0	4	3	2	-2	0	1	-1	0
0	0	2	1	3	1	0	1	-1	-1	-1	0	0	1	3
-1	2	0	1	-1	-1	0	-1	0	0	-1	0	0	-1	-1
2	0	1	2	2	0	0	1	0	1	0	0	-1	1	0
1	2	0	3	0	-2	0	2	2	0	0	0	0	1	0

W

Fig. 8. How a King's Chamber would have been revealed.

It was of course a disappointment to find no burial chambers, no marvelous treasures. But the use of "rays" provided by nature together with the new tool of spark chambers was ingenious. And the mystery was solved. People would say to Luie, "So you didn't find any chambers." "No," Luie would reply. "We found that there are no chambers."

2. *THE JFK ASSASSINATION*[6]

A bad day—President John F. Kennedy was shot and killed on November 22, 1963, while being driven slowly in an open limousine through the streets of Dallas, Texas. The trip to Texas was a political event, and the route had been announced so that people could come out and see their President. Figure 9 shows the scene of the assassination. A Mr. Abraham Zapruder, standing where indicated, took motion-picture film as the car rolled by, and his film is the principal evidence in trying to reconstruct what happened. The President was hit by an earlier shot, but at frame 313 of the film (see Fig. 9) blood and brain are blown out of the front of his head. The Oliver Stone movie *JFK* included the Zapruder film. Not much else in *JFK* is exactly firmly based on fact.

A few hours after the assassination, Lee Harvey Oswald was arrested, after shooting and killing a police officer. Two days later, Oswald, while being transferred from one jail to another, was himself shot and killed by Jack Ruby, the owner of a Dallas nightclub. The shock of all this was comparable to that of September 11, 2001.

A Commission headed by Chief Justice Earl Warren, with all the resources of the United States Government at its call, investigated the assassination, and eventually issued a 27-volume report of evidence, testimony, and conclusions. The principal conclusion was that Lee Harvey Oswald, acting alone, fired three shots from a sixth-floor window of the Texas School Book Depository building, where he was employed (see Fig. 9).

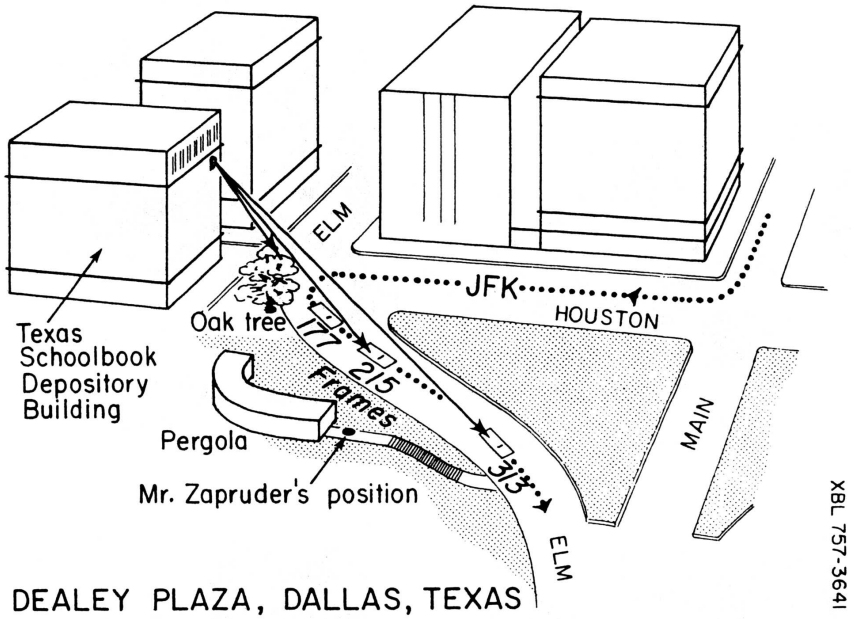

Fig. 9. A schematic of Dealey Plaza. The lines indicate where Luie thought three shots occurred.

Conspiracies—From the beginning, many people have not believed that Oswald acted alone—or perhaps at all. In the 1960s, bookstores had whole tables of books promoting various theories. All the theories were fueled by the damning fact that Oswald was killed, while in the custody of the police, having said little but to protest his innocence. Implicated, among others, were the Soviet Union because Oswald had exiled himself there for a while, pro-Castro Cubans for attempts by the United States to overthrow Castro, anti-Castro Cubans because the US pulled back from attempts at overthrow after the Bay of Pigs fiasco, disaffected elements in the government itself because Kennedy was having second thoughts about the growing conflict in Vietnam, and the Mafia and/or the Teamsters because of Attorney General Robert Kennedy's prosecution of gangsters. Sometimes two or more of the groups acted together, as in Oliver Stone's *JFK*. It seemed almost as the Rolling Stones song says, "Who killed the Kennedys, When after all it was you and me."

One of the strongest arguments for a conspiracy came directly from the Zapruder film. Figure 10 shows a figure from a 1967 book, *Six Seconds in Dallas*, by Josiah Thompson, then a philosophy professor at Haverford College.[7] The horizontal axis shows the distance of the President's head, as determined from the film, from the top of the rear seat. Time (frame number) increases upward; the camera speed was 18 frames/s. Between frames 312 and 313, the President's head snaps two inches forward, but after frame 313, where blood and brain jet forward (clear evidence of a shot from behind), it snaps much farther backward. Physics says—doesn't it?—that if you are shot, the momentum of the bullet kicks you in the direction of its motion. Thus there must have been two shots in quick succession, the first from behind (from Oswald in the School Book Depository), the second from in front. And thus two shooters (at least), and a conspiracy.

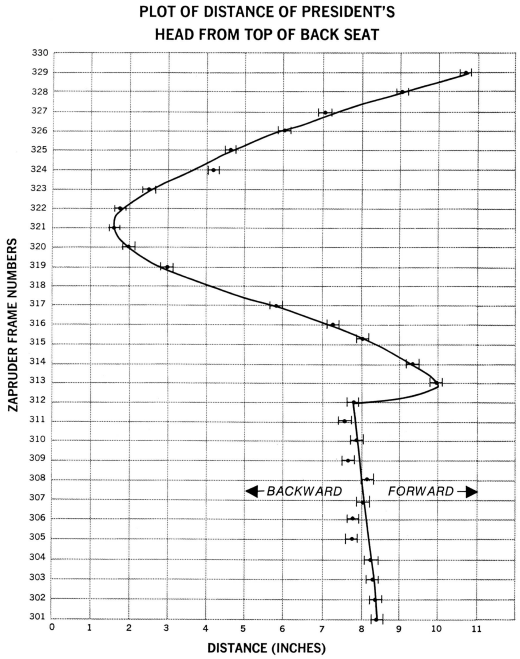

Fig. 10. The motion of the President's head relative to the back of the rear seat of the limousine. From Ref. 7, with permission.

Momentum is conserved—Luie's scientific interest in the assassination began three years after it occurred, when the November 25, 1966 issue of *LIFE* magazine published some of the frames of the Zapruder film. Luie was an expert in the analysis of photographs—his physics group had analyzed hundreds of thousands of photos of interactions of elementary particles, and he had invented a camera stabilizer and other optical devices. He was, over a period of time, able to make a number of deductions from the film. The most important of these was the completely counterintuitive demonstration that something hit by a bullet can be jerked *toward* the shooter, and thus that the motion of the President's head was *not* conclusive evidence for two shooters.

To understand the argument, we consider first a ballistic pendulum, a device used to measure the momentum of a bullet; momentum p is mass times velocity, $p = mv$. Figure 11 shows the pendulum—a block of wood, say, hanging from vertical wires. A bullet is shot horizontally into the wood and lodges in it—a "completely inelastic (because the bodies stick together) 2-body collision." The momentum of bullet plus pendulum at the instant after the bullet lodges is equal to that of the bullet just before it reaches the pendulum: that is, momentum is conserved until the pendulum has time to swing a bit and the wires begin to pull sideways. Of course, the pendulum swings in the direction the bullet was moving, and how far it swings allows one to calculate the momentum of the bullet.

Energy is conserved too—but not *kinetic* energy, the energy of motion. Suppose, for simplicity, that the mass M of the pendulum is 999 times the mass m of the bullet, or $m + M = 1000\,m$. Kinetic energy is $K = \frac{1}{2}mv^2 = p^2/2m$ (the symbols refer to whatever

body is being considered). Then since p is the same before and immediately after the bullet lodges:

$$K(\text{bullet} + \text{pendulum}) = \frac{p^2}{2(m+M)} = \frac{p^2}{2 \times 1000\, m} = \frac{1}{1000}\frac{p^2}{2m} = \frac{1}{1000}K(\text{bullet}) \ .$$

Thus 99.9% of the kinetic energy of the bullet is "burned up" as it bores into the wood, heating and deforming itself and the wood. More generally, the percent of kinetic energy turned to other forms is $100M/(m+M)\%$.

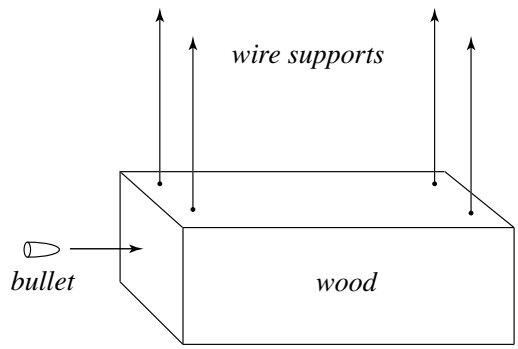

Fig. 11. A ballistic pendulum.

An aside: Everyone has seen movies in which someone shot is blown away from the shooter. My favorite example is in *Shane*, a fine 1953 western in which at the final shootout Shane (Alan Ladd) outdraws the murderous gunfighter Wilson (Jack Palance), and blows him into a pile of barrels. But there is a problem with these scenes. The explosion in the pistol that gives momentum to the bullet gives equal and opposite momentum to the shooter. If the momentum of the bullet is enough to blow Wilson one way, it is enough to blow Shane the other.

A three-body interaction—What Luie saw in the Zapruder film is that the interaction of the bullet with its target was, because of the jets of blood and brain, not a simple inelastic 2-body collision. He modeled the interaction with three bodies: a bullet, a jet, and a target, with masses m_b, m_j, and m_t. Suppose the jet carries off a fraction f of the kinetic energy of the bullet. Then

$$K_j = \frac{p_j^2}{2m_j} = fK_b = f\frac{p_b^2}{2m_b} \ .$$

From this, the momentum of the jet in terms of that of the bullet is given by

$$p_j^2 = f\,\frac{m_j}{m_b}\,p_b^2 \ .$$

Now if $f(m_j/m_b)$ is greater than one—say, $f = 1/10$ and $m_j/m_b = 15$—then p_j is greater than p_b; the jet carries off *more* momentum than the bullet brought in, and in the same direction as the bullet. Conservation of momentum, $p_b = p_j + p_t$, then requires that p_t be negative—that is, that the target move backward, *toward* the shooter.

The response to this back-of-the-envelope calculation was tepid. There is no reason to believe that a *possible* solution of an equation is a *likely* solution, especially when the equation itself comes from a simplified model of a complicated event. Pushed to somehow demonstrate the effect experimentally, Luie got a few friends together, they wrapped seven cantaloupes in filament tape to add, like a skull, some tensile strength, and they shot them with a hunting rifle. Six of the seven melons recoiled toward the shooter. Figure 12 shows frames from a movie of one of the shots.[8] Which way is the shooter? Which way does the melon go? Although a taped melon is not a head, the experiment demolishes the assumption that a shot object is always kicked away from the shooter.

There remains the fact that in less than the 1/18th second between frame 312, before there is any apparent motion of the President's head, and frame 313, which shows the jets, there is a 2-in forward motion. Luie does not address this. How to explain, without two bullets, this initial forward motion? Perhaps the collision proceeds through a very brief 2-body stage, pushing the head forward, before jets develop to drive it backward. It would take some high-speed photographic experiments to investigate this.

In summary, Luie's investigation brought into serious question the inference that the Zapruder film proves there were two shooters; but perhaps his analysis does not completely resolve the matter. And of course even if a single bullet can be responsible for all the motion, that cannot prove there was only one shooter (an almost impossible task).

Other findings—Here, without full explanations, are the other main findings of Luie's examination of the Zapruder film.[6] Of more interest than the results is the simple reasoning based on *close* observation. The FBI's photo analysts, with a 3-year head start, noticed none of the following.

• Luie invented a camera stabilizer because he was upset at jitter in motion pictures he took. In particular, he knew that a loud noise such as a gunshot would cause an involuntary reflex and an oscillatory jitter. In the Zapruder film, he noticed that streak lengths of "highlights"—glare from points on the limousine—vary from frame to frame. By plotting *differences* in streak lengths from one frame to the next, he found probable times, indicated in Fig. 9, for three shots. (To me, these results were suggestive but not conclusive.)

• The camera had two frame-rate settings: normal (18 frames/s) and slow-motion (48 frames/s). In slow-motion mode, it is only four seconds between, say, frames 150 and 340 (see Fig. 9 again), not enough time for Oswald to have fired the three shots, reloading between them, of the standard version of events. Luie noticed that a man in about 18 frames as the camera tracks the limousine and pans by him, claps 3.7 times. At 18 frames/s, this is 3.7 claps/s, an ordinary rate; at 48 frames/s, this is a maniacal 9.3 claps/s. Try it, with the 1-ft maximum separation of the man's hands. (A nice argument, but the frame rate was no longer controversial by the time Luie addressed it.)

• After frame 255, there are no permanent features in the film—no buildings or light poles, only a grassy park and a few people. The FBI's analysts claimed that without permanent features it was impossible to say exactly where the limousine was in each of these frames. Luie showed how *any* fixed object, no matter how temporary, such as

a person's set foot or a glint of a shiny object in the grass, could be used. He thus showed that at about frame 300 the limousine slowed from about 12 mi/hr to 8 mi/hr. He attributed this to the driver instinctively taking his foot off the accelerator, with the car in a low gear, when a siren went off.

Luie's investigations of the Chephren pyramid and of the Kennedy assassination were clever and interesting, but the results were not of enormous importance. However, the third piece of detective work uncovered a calamity that literally shook the Earth, and is one of the great discoveries about Earth's history.

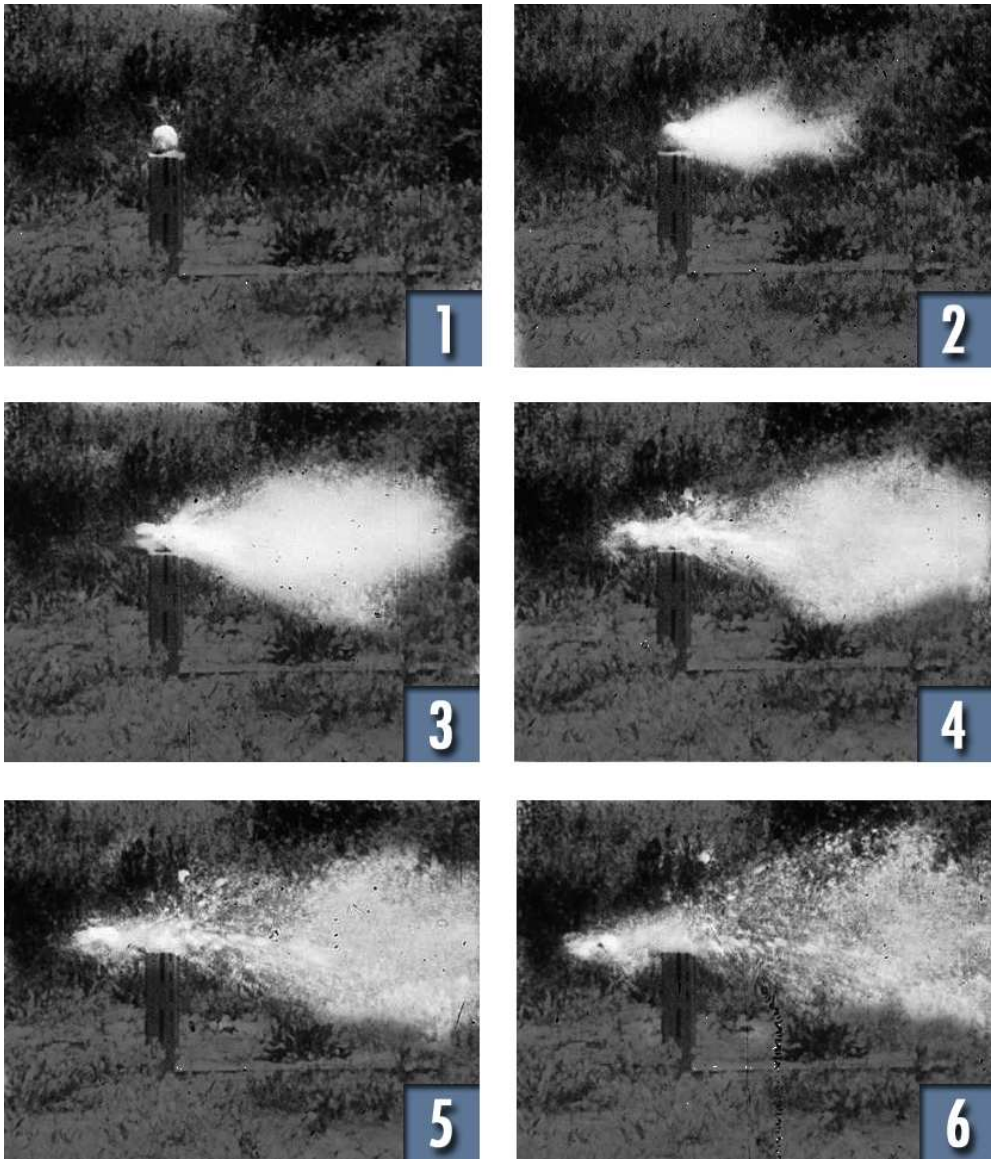

Fig. 12. Frames (somewhat cropped) from a movie of shooting a melon.[8] They are in color (and clearer) at jfklancer.com/galanor/jet_effect

3. THE END OF THE DINOSAURS[9]

A terrible day—About 65 million years ago, an asteroid or a comet—a rock or a very dirty snowball—about 10 km (6 mi) across struck the Earth. It was probably traveling at about 30 to 60 km/s (20 to 40 mi/s). The uranium bomb that destroyed Hiroshima released an energy equivalent to about 14,000 tons of TNT. The hydrogen bombs tested in the 1950s were roughly 70 times as powerful, the equivalent of about one million tons (a megaton) of TNT. The impact of the asteroid (or comet) released the energy of roughly *one hundred million* of these megaton bombs. This is simply the kinetic energy, $\frac{1}{2}Mv^2$, of the asteroid, very nearly all of it turned to heat energy in the instant of impact, a completely inelastic 2-body collision. It doesn't take a nuclear explosion to get enormous energies.

Drop a heavy rock in a pond and watch the splash—a crown-like curtain of water, and perhaps a secondary splash as the water overshoots in refilling the hole. An object 10 km across and 5,000 times as fast as the rock makes a big splash. The speed of the asteroid was far greater than that of elastic (sound) waves in rock, and a shock wave traveled out in all directions into the Earth, vaporizing, melting, or pulverizing matter, depending on distance; and a shock wave traveling back through the asteroid instantly vaporized it too. An immense curtain carried 20 to 100 times the mass of the asteroid into ballistic trajectories, leaving an enormous crater. At the center, the hole in the Earth was, for a brief time, perhaps 40 km (25 mi) deep. An elastic rebound made a central peak higher than Everest, which collapsed back into the crater, as did earth and rock in cascades of slides from the periphery inward, leaving a target-like pattern of terraces about 200 km (125 mi) across.[10] The waters of an adjacent sea, settling down from a half-mile-high tsunami, sloshed into the crater.

Moments after the impact, the matter blown from the site began to streak back through the atmosphere all around the Earth, burning like shooting stars, and the sky blazed. When the sky cooled, no light penetrated the cloak of dust and soot, which took several months to settle out. Any microscopic plant life in the surface layers of the oceans that survived the heat then died from lack of light for photosynthesis, and the whole food chain that led from this life died too. On land, fires raged, and any vegetation too green to burn would be set alight by lightning after it had died in the darkness.

There were other horrors. An enormous fireball of vaporized rock rose from the impact site. The atmosphere is mainly nitrogen and some of the rock at the site contained sulfur, and the fireball made oxides of these elements, and for thousands of kilometers downwind the skies rained nitric and sulphuric acids. Much of the rock was limestone—calcium carbonate—and the impact released enormous quantities of carbon dioxide into the atmosphere. While the sky was dark, the temperature of the Earth fell to well below freezing.[11] When in months the sky cleared and the Earth warmed, it over-warmed due to the carbon dioxide.

At this instant in geologic time, more than half of the species then existing vanished forever. Among them were all the land animals larger than about 50 pounds, including of course the dinosaurs. It is this sudden, partial "restart" of evolution that opened the way for the mammals, and eventually for us, to inherit the Earth.

What did survive? On land, roots and seeds and spores would revive much of

the plant kingdom. Of the animals, those that could hibernate through the dark winter, those adapted to cold, those whose diet was, or could become, roots and decaying matter: microbes, insects, snakes, alligators, other cold-blooded animals, small mammals, and other ground dwellers. In the oceans, lakes, and waterways, bottom feeders, able to live on decaying matter. Chance must have played a large role. In the immediate aftermath, few individuals of any species would have been left alive. A few survivors might rekindle a species, or it might flicker out of existence.

How can we know?—How can we know what happened 65 million years ago? By studying rocks. Geology as a science grew from the immensely important and profitable enterprises of mining and, later, drilling; from curiosity about objects that for all the world looked like sea shells and sharks' teeth, found in road cuts and canal diggings high above the ocean; from wondering about how long it had taken water to cut a deep canyon through solid rock. Over the last two centuries, geology has given us a sketchy history of the Earth and life on it. Paleontology—the branch of geology that deciphers the history of life from fossils in the rocks—has discovered that species are continually coming into and going out of existence, but also that there have been five great extinctions. In each of these, in some relatively short but unknown span of time, a large fraction of the species then existing vanished forever. These extinctions *define* the boundaries between major geological periods. The most recent of the major extinctions occurred about 65 million years ago, and marks the boundary between the "Cretaceous" and "Tertiary" periods—the KT boundary (C is in use elsewhere). There were many ideas about what might have caused the extinctions, but as of the 1970s they were all just guesses.

Luie's son Walter Alvarez is a geologist. In the 1970s, he spent summers working out of a small town, Gubbio, in northern Italy. The walls of a nearby gorge are several hundred meters of limestone, laid down over 50 million years at the bottom of a sea, and later raised up to become mountains. Limestone is made of the shells and debris of microscopic life in the sea; the remains sink to the bottom, are buried by more remains and compressed by the overlying sea, and eventually become solid rock. Mixed into the limestone is a small amount of clay eroded from the continents by water and wind. Walter was studying reversals of the Earth's magnetic field as recorded in the rock. He hoped to (and did) correlate the pattern of reversals with reversals discovered in lava flows in the mid-Atlantic. In this way, the known time sequence of the fossils in the gorge would date the reversals in the lavas, in which there are no fossils for dating.

The interval of Earth's history recorded in the walls of the Gubbio gorge is revealed by the species of the microscopic fossils, and it encompasses the extinction 65 million years ago. The marker of the extinction is an abrupt change of the fossils in the limestone. For hundreds of meters going up the walls (and forward in time) the (Cretaceous) limestone is rich in species, some large enough to be seen with the naked eye. This is capped by a layer of clay about a centimeter thick. The (Tertiary) limestone above the clay is different: few species, none visible without magnification. Walter cut a piece about the size of a deck of cards out of the rock—limestone, clay, limestone—and showed it to his father: This marks where the dinosaurs and much else went extinct. Nobody knows why. Or what the clay is about. A *big* mystery! Luie was hooked.

Sometimes the hardest thing is to think of a good question, a place to start. The abrupt change in the limestone draws attention to the otherwise seemingly ordinary layer

of clay. Luie and Walter tried to think of a way to find out how long it had taken for that thin layer to be deposited. A year? Ten thousand years? How can you possibly find out how long it took a centimeter of clay to be deposited 65 million years ago? Why find out anyway? Well, it might lead to something—it might be a clue. And it was.

The key is iridium—Here, leaving out many false starts, dead ends, and detours, is what Luie and Walter thought up—the answer, as with the pyramids, came from the sky. When the Earth formed out of the primordial chaos of gas and dust swirling about the Sun, the gravitational energy of infall of accumulating matter and the radioactive decay of unstable elements heated the Earth and it turned molten. Much of the iron sank to the center, taking with it nearly all of the six elements of the platinum group (platinum, osmium, iridium, ...), which form alloys with iron. But the dust and debris in the Solar System that never became part of a planet never went through this scrubbing process; the platinum-group elements are still rare in the asteroids and comets, but are not nearly so rare as they are in the Earth's crust. A constant hail of tiny meteoroids burning up in the atmosphere causes a constant ever-so-light dusting of the Earth's surface with platinum-group elements. Knowing the composition of meteoroids and the present rate of dusting, and assuming that the rate of dusting has remained constant over the eons, then by measuring the amount of a platinum-group element in a given thickness of soil or rock, you can determine how long it took that thickness to form. If there is very little of the element in the layer, then it was formed in a short time; if there is a lot of it, then the layer took a long time to form. Or so Luie and Walter reasoned.

Luie thought iridium (element 77 in the periodic table) would be the best element to look for. But the abundances would still be well below the parts-per-billion level, and therefore would only be detectable using very sensitive techniques of nuclear chemistry. So Luie and Walter looked for a nuclear chemist and found Frank Asaro, who somewhat later was joined by Helen Michel.

What they found in the boundary clay, using a technique called neutron activation analysis, was a *lot* of iridium! Figure 13 is a plot of the iridium abundance going across a few meters of the rock that includes the boundary clay: a spike, right at the boundary layer.[11] Either the clay layer had taken a very *long* time to form, during which time no calcium carbonate had settled with it, or something else had happened. Where could all that iridium have come from?

Luie and Walter had two big questions in mind: "What caused the clay layer?" and, "What did it have to do with the great extinction?" Suppose a very *large* body had struck. It would have left a lot of iridium all at once and might also have caused the extinction. The boundary clay would simply be the dust from the impact that had settled out of the atmosphere. And since the catastrophe was world wide, there ought to be clay layers and iridium spikes all over the world, at just the level in the rock at which the extinction took place.

The second site they investigated was in Denmark. And there they found even more iridium than in Italy. They published.[9] Groups around the world began to look for iridium, and found it in the rock right where the paleontologists said the extinction had occurred. Within a few years, more than 100 such sites were found. The iridium layer is the closest thing there is to a universal time marker in the geological record.

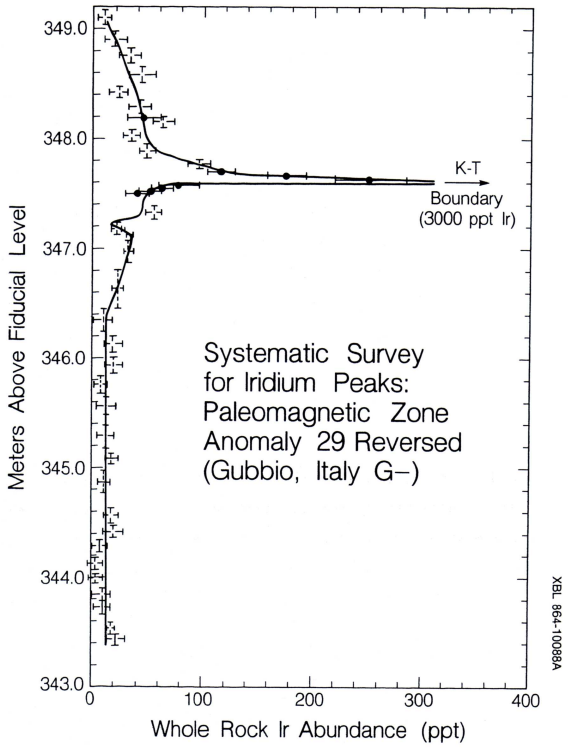

Fig. 13. The iridium abundance across the thin layer of clay that marks the Cretaceous-Tertiary boundary near Gubbio, Italy (ppt means parts per trillion).[12] This rock was formed on a sea floor.

The first findings were all in formations that 65 million years ago were at the bottom of seas, and arguments were made that perhaps some unknown event had precipitated out the small amount of iridium that is in the oceans. Thus a particularly important site was one in New Mexico, in what 65 million years ago was a fresh-water marsh.[13] On the left of Fig. 14 is the iridium spike, and on the right is the ratio of flowering-plant pollen to fern spores. Clearly, ferns were hit less hard and/or recovered faster than did the flowering plants.

A clay like no other—Not only was a boundary clay rich in iridium found at many sites, but over the next few years various researchers found a lot more in that clay:

• Soot—enough of it, if the clay was deposited in a short time, to indicate that most of the Earth's vegetation had burned.

• Tiny glassy spherules, formed when molten or vaporized rock blown from the impact site cooled and hardened in flight.

• Quartz crystals, shocked with crisscrossing fracture planes never seen except at sites of meteor impact or nuclear explosion.

• Microscopic diamonds and other rare minerals formed only under conditions of great temperature and pressure.

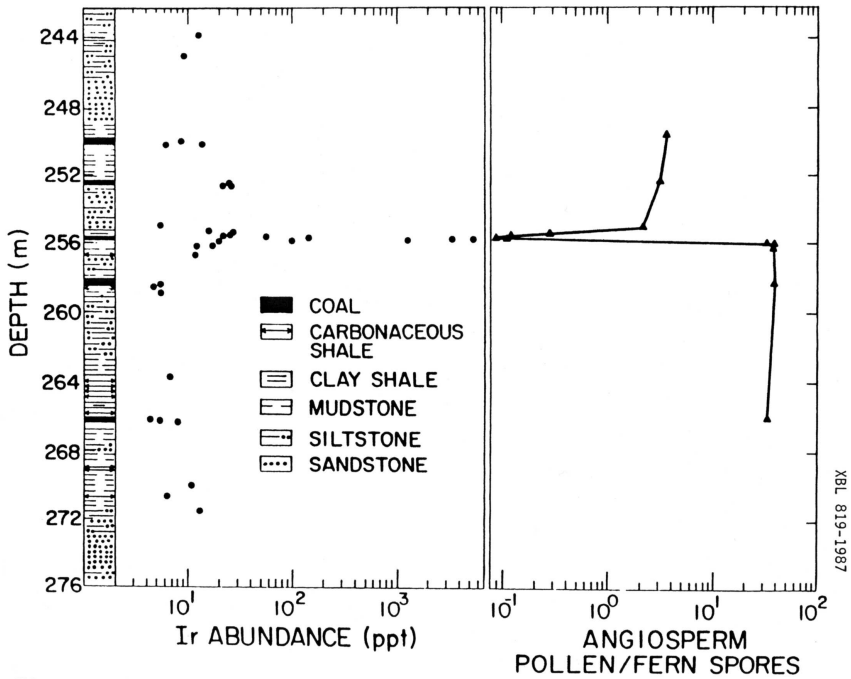

Fig. 14. The iridium abundance and the ratio of angiosperm pollen to fern spores across the Cretaceous-Tertiary boundary in New Mexico.[13] This rock was formed in a fresh-water marsh. (Note the logarithmic scales.)

Furthermore, if the clay layer found around the world was the dust that had settled out of the atmosphere, then it all came from the impact site—from the vaporized asteroid itself and the much larger mass of material blown out by the impact. There followed two major predictions.

(1) The clay in the boundary layer would be different in composition from clay in the rock immediately below and above the layer. The few percent of clay in limestone comes from eroded matter from the continents. Figure 15 compares, for the Danish site, the chemical compositions of the clays below (Cretaceous), within, and above (Tertiary) the boundary layer. The top two rows give the abundances of common elements, in percent; the shadings indicate measurement uncertainties. The abundances of silicon and aluminum, for example, are much the same in all three clays, but the abundances of iron, potasium, and sodium in the boundary clay are very different from those in the "local" clays to either side.

The bottom two rows compare abundances of rare elements, in parts per million. Here the abundances for all the elements in the boundary clay are very different from those in the clays to either side. (Note iridium.)

(2) Clays in the boundary layers everywhere ought to be similar in composition; they all came from the asteroid and the impact site. Figure 16 compares abundances in boundary clays from the Danish site and from a drilling core taken from beneath the Pacific Ocean. The abundances lie along the 45° line, as predicted.

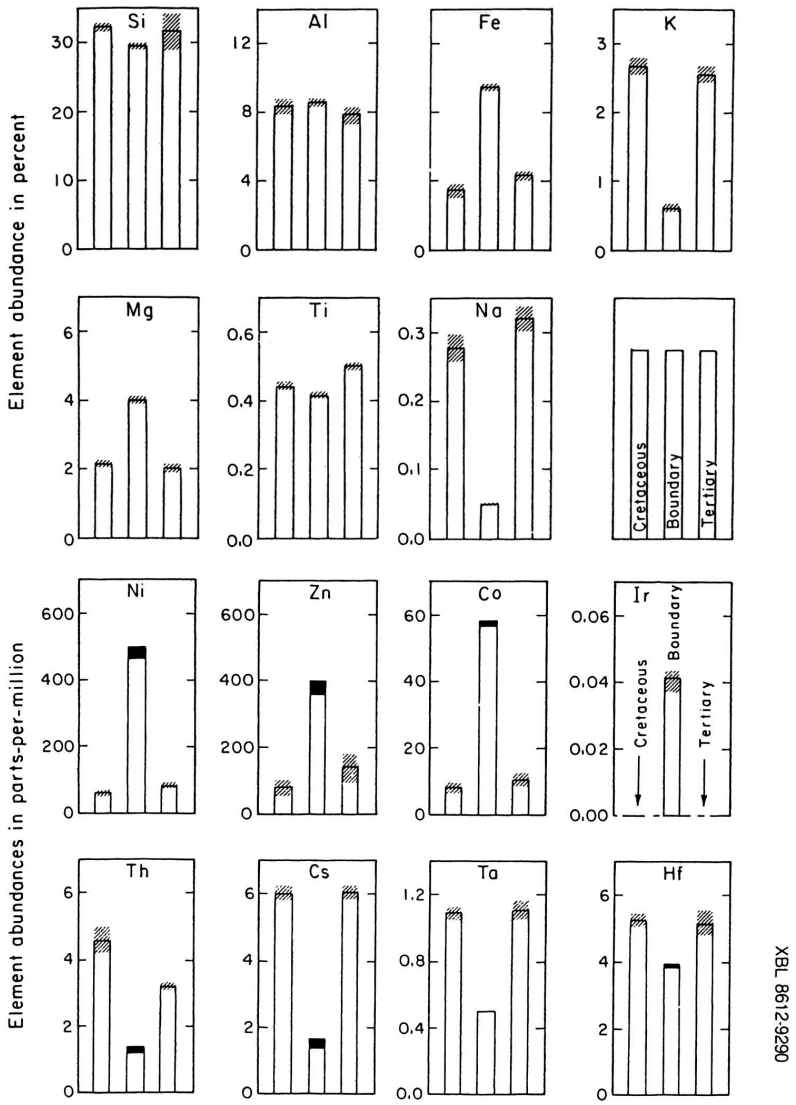

Fig. 15. A comparison of element abundances across the clay layer in the Danish site.[12] Note the key in the second row, right. The top rows are for common elements, the bottom rows are for rare elements.

Boundary clays from two sites 10,000 miles apart, each marked by iridium and unmistakable signs of impact, have the same chemical composition; but these clays are very different from the clays a finger-width to either side. It is hard to imagine stronger evidence for an impact, other than finding the crater itself.

And the crater was found in 1991, unfortunately after Luie had died. Much detective work went into finding the site; the clues were the leavings of the enormous tsunami the impact caused, and the closely held prospecting records of an oil company. However, the work was not Luie's, and the story is complicated (the crater was *really* found in 1981). Figure 17 shows the site, which spans the coastline of Yucatán. For more, see the books by Walter Alvarez and James Lawrence Powell cited below.

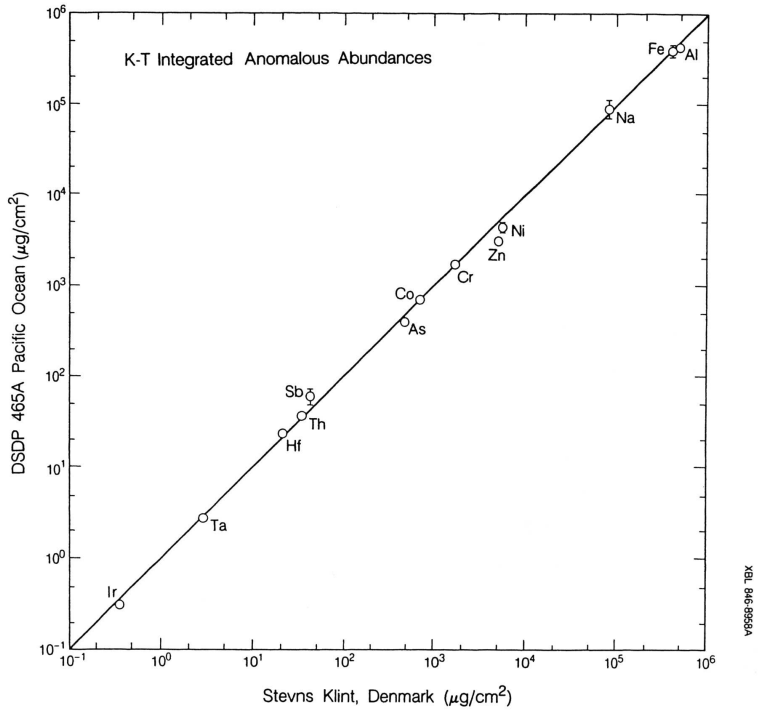

Fig. 16. A comparison of abundances from the boundary layers in Denmark and a deep-sea core in the Pacific Ocean.[12]

Fig. 17. The site of the impact, in Yucatán, Mexico.

4. NOTES, ACKNOWLEDGMENTS

Two of the mysteries are solved: There are no large chambers in the body of Chephren's pyramid, and a large asteroid or comet killed the dinosaurs and much of the rest of life on Earth 65 million years ago. And something was learned about the assassination. The pyramid paper, the assassination paper, and the first dinosaur paper are reprinted in *Discovering Alvarez: Selected Works of Luis W. Alvarez with Commentary by His Students and Colleagues*, ed. W. Peter Trower (U. of Chicago Press, Chicago, 1987). More informal is Luie's scientific autobiography, *Alvarez: Adventures of a Physicist*, Luis W. Alvarez (Basic Books, New York, 1987). These books cover his whole career.

On the extinction mystery, I have of course focussed on Luie and Walter's pivotal role, but the story is much broader and many people were involved. For the geological background, the challenge the impact theory made to uniformitarian dogma, the search for the crater, and early investigations that followed its finding, see *T. Rex and the Crater of Doom*, Walter Alvarez (Princeton University Press, Princeton, 1997). For a detailed analysis of the often acrimonious debate between the impact theorists and much of the geological community—a scientific fight with Luie could come to resemble a bar fight with Chuck Norris—see *Night Comes to the Cretaceous*, James Lawrence Powell (Harcourt, Brace, & Co., San Diego, 1998). These books are very readable and give extensive references to the literature up until the mid 1990s.

I tell about Luie's detective work in almost any course I teach, in the lecture before an exam. Students can use the break, and physics education could do with more stories and less of, "A 1.93-kg block is placed against a compressed spring on a frictionless 27° incline ..."

I am grateful to several people for help and advice. James Burkhard, a member of the pre-1967-War expedition to Egypt, and Gerald Lynch, who did the data analysis shown in Figs. 5 through 8, read Sec. 1. Paul Hoch, Luie's guide and foil on all matters concerning the assassination and conspiracies, kept me from making a number of errors in Sec. 2. Walter Alvarez read Sec. 3. Quibbles about English from Ronald Roizen led to some clearer sentences. Paul Schaffner helped with the figures. Narendra Jaggi of Illinois Wesleyan University, Jason Zimba of Bennington College, and Roger Bland of San Francisco State University, arranged for me to talk at their institutions.

e-mail: cgwohl@LbL.gov

1. Richard P. Feynman, *What do You Care What Other People Think?* (W.W. Norton, New York, 1988).
2. Luis W. Alvarez, Jared A. Anderson, F. El Bedwei, James Burkhard, Ahmed Fakhry, Adib Girgis, Amr Goneid, Fikhry Hassan, Dennis Iverson, Gerald Lynch, Zenab Miligy, Ali Hilmy Moussa, Mohammed-Sharkawi, Lauren Yazolino, "Search for Hidden Chambers in the Pyramids," Science **167**, 832 (1969). Figures 1, 2, and 5 through 8 are adapted from this paper.
3. Three or four cathedrals may have had spires that rose above 500 ft. They tended to fall down.
4. A statement of principle attributed to John Crow, in R.V. Jones, *The Wizard War: British Scientific Intelligence 1939–1945*, pp. 76–7 (Coward, McCann, & Geoghegan, New York, 1978).
5. Gerald R. Lynch, "Locating Chambers in an Egyptian Pyramid Using Cosmic Rays," Lawrence Berkeley Lab Report LBL-2180 (1973).
6. Luis W. Alvarez, "A Physicist Examines the Kennedy Assassination Film," Am. J. Phys. **44**, 813 (1976). Figure 9 is from this paper.
7. Josiah Thompson, *Six Seconds in Dallas; a Micro-Study of the Kennedy Assassination* (Bernard Geis, 1967).
8. With permission of Don Olson, who took the movie.
9. Luis W. Alvarez, Walter Alvarez, Frank Asaro, Helen V. Michel, "Extraterrestrial Cause for the Cretaceous-Tertiary Extinction," Science **208**, 1095 (1980).
10. See lpl.arizona.edu/SIC/impact_cratering/Chicxulub/Animation.gif for an animation.
11. The idea of nuclear winter, much discussed in the 1980s as a theretofore overlooked aftereffect of a full-scale nuclear war, came from investigations of consequences of an asteroid impact.
12. Luis W. Alvarez, "Mass Extinctions Caused by Large Bolide Impacts," Lawrence Berkeley Lab Report LBL-22786 (1987). Figures 13, 15, and 16 are taken from this report.
13. C.J. Orth, J.S. Gilmore, J.D. Knight, C.L. Pillmore, R.H. Tschudy, J.E. Fassett, "An Iridium Abundance Anomaly at the Palynological Cretaceous-Tertiary Boundary in Northern New Mexico," Science **214**, 1341 (1981).